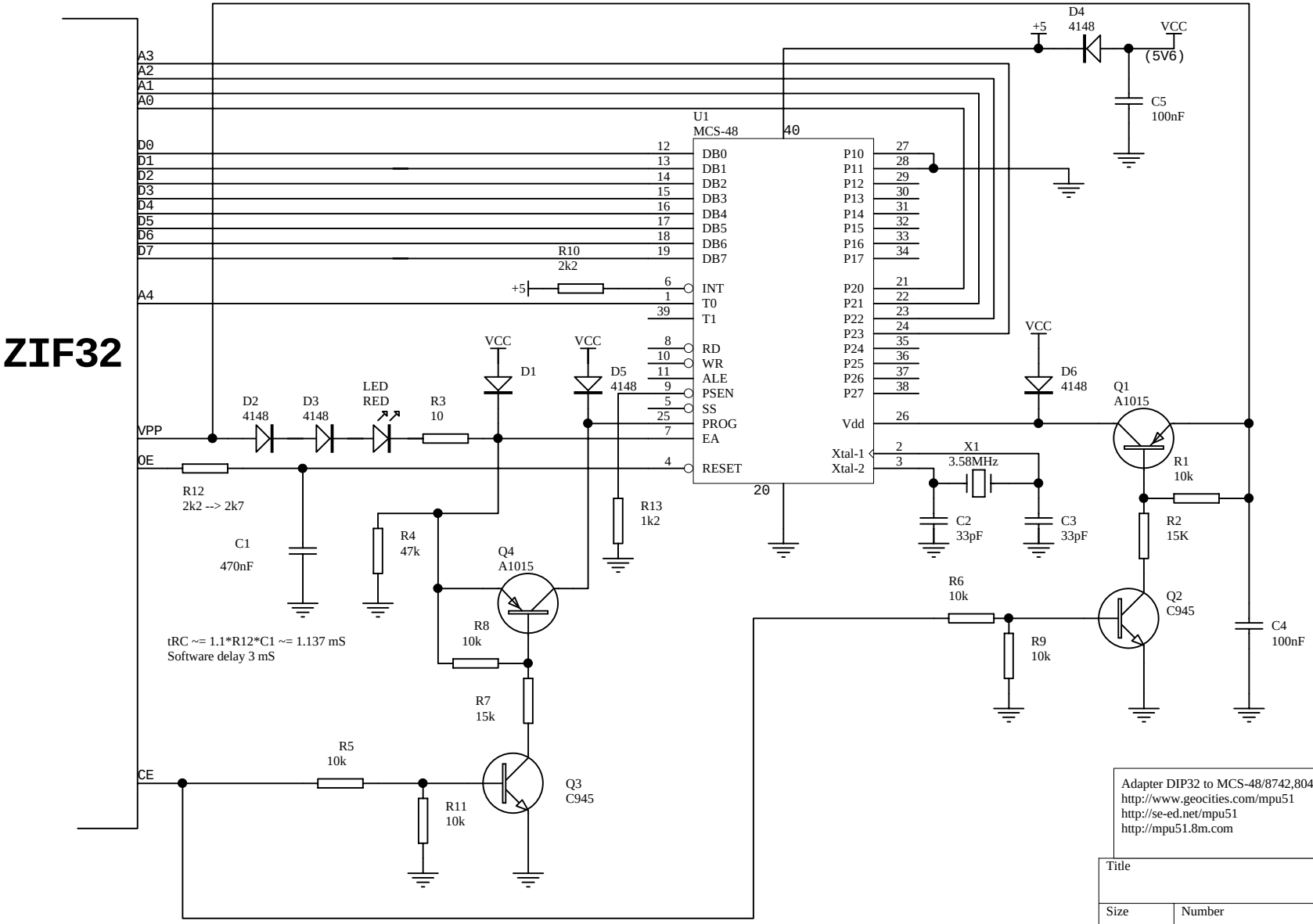

Adapter DIP32 to MCS-48/8742,8042 for Willem Eprom programmer
http://www.geocities.com/mpu51
http://se-ed.net/mpu51
http://mpu51.8m.com

Title		
Size A4	Number	Revision
Date: 26-Jun-2002	Sheet 1 of 1	
File: C:\CAD\SCH\MCS-48.S01	Drawn By:	